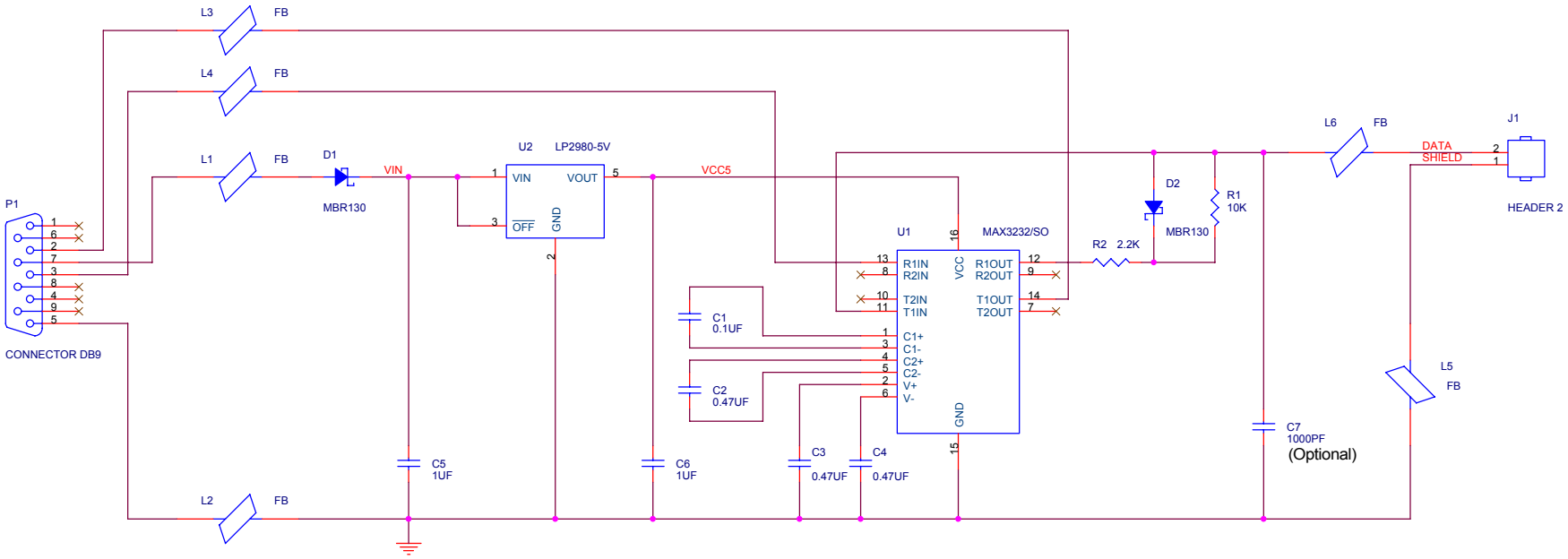

Tested with Yaesu VX-170 and FT-1802

Original design by Andrea Borgia 1Z4FHT, based on the work of Howard Groveman KD6UU

Title	Yaesu RS232 programming interface	
Size B	Document Number 0	Rev 1.0
Date: Saturday, April 07, 2007	Sheet 1 of 1	